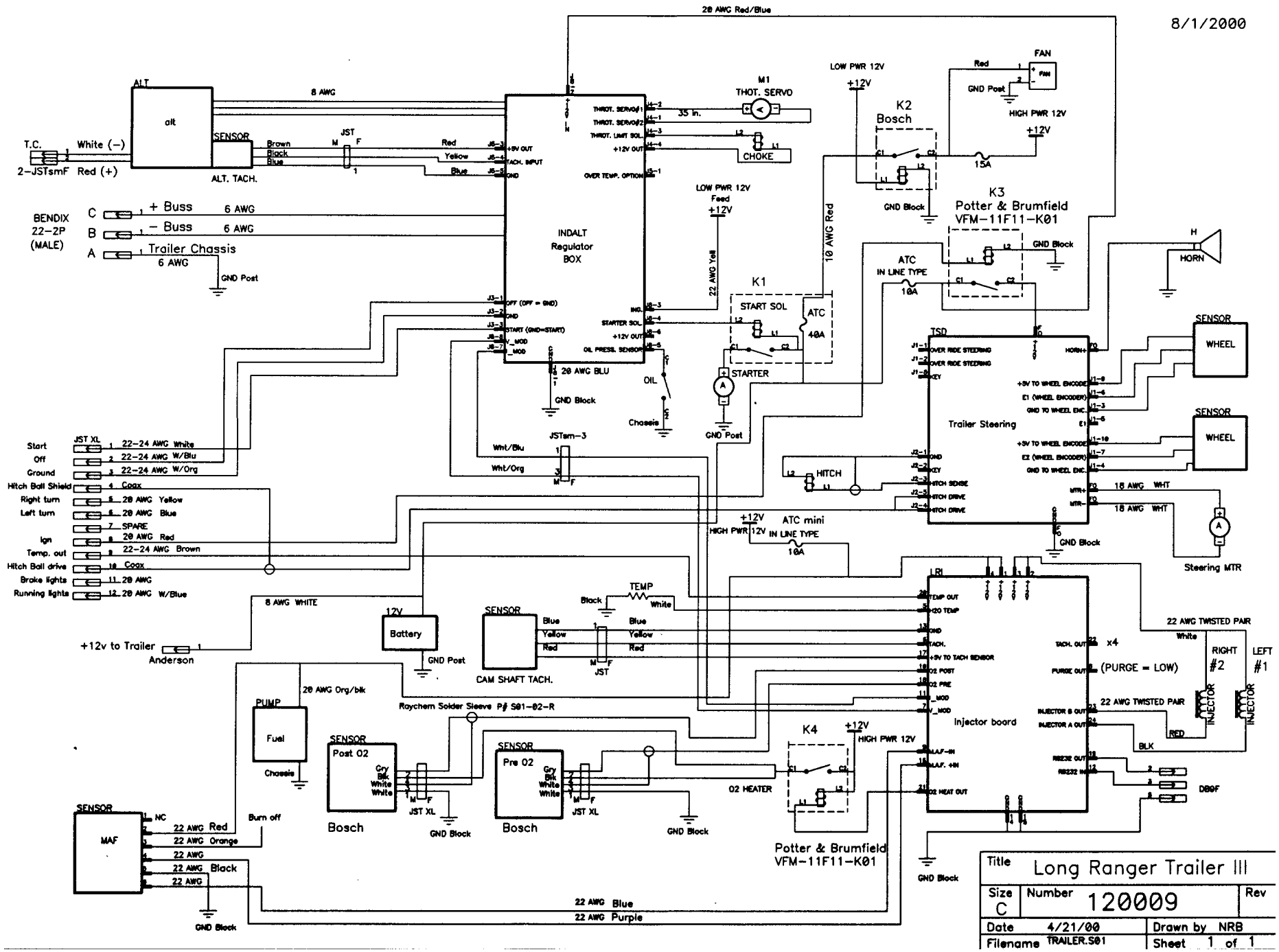
8/1/2000
20 AWG Red/Blue
ALT
alt
8 AWG
SENSOR
ALT. TACH.
T.C.
White (−)
2-JSTsmF
Red (+)
Brown
Black
Blue
JST
Red
Yellow
Blue
BENDIX
22-2P
(MALE)
C + Buss 6 AWG
B − Buss 6 AWG
A Trailer Chassis
6 AWG
GND Post
INDALT
Regulator
BOX
THROT. SERVO#1
THROT. SERVO#2
THROT. LIMIT SOL.
+12V OUT
OVER TEMP. OPTION
35 in.
M1
THOT. SERVO
CHOKE
LOW PWR 12V
+12V
K2
Bosch
GND Block
FAN
GND Post
HIGH PWR 12V
15A
K3
Potter & Brumfield
VFM-11F11-K01
LOW PWR 12V
Feed
+12V
22 AWG Yell
10 AWG Red
ATC
IN LINE TYPE
10A
K1
START SOL
ATC
40A
STARTER
GND Post
OIL
Chassis
20 AWG BLU
GND Block
HORN
SENSOR
WHEEL
TSD
Trailer Steering
Start
Off
Ground
Hitch Ball Shield
Right turn
Left turn
Ign
Temp. out
Hitch Ball drive
Brake lights
Running lights
JST XL
22-24 AWG White
22-24 AWG W/Blu
22-24 AWG W/Org
Coax
20 AWG Yellow
20 AWG Blue
SPARE
20 AWG Red
22-24 AWG Brown
Coax
20 AWG
20 AWG W/Blue
JSTsm-3
Wht/Blu
Wht/Org
HITCH
+12V
HIGH PWR 12V
ATC mini
IN LINE TYPE
10A
18 AWG WHT
Steering MTR
8 AWG WHITE
+12v to Trailer
Anderson
12V
Battery
GND Post
SENSOR
CAM SHAFT TACH.
TEMP
Black
White
Blue
Yellow
Red
JST
LRI
Injector board
22 AWG TWISTED PAIR
RIGHT
#2
LEFT
#1
INJECTOR
(PURGE = LOW)
RED
BLK
DB9F
PUMP
Fuel
Chassis
20 AWG Org/blk
Raychem Solder Sleeve P# S01-02-R
SENSOR
Post O2
Gry
Blk
White
White
JST XL
Bosch
GND Block
SENSOR
Pre O2
Bosch
K4
+12V
HIGH PWR 12V
O2 HEATER
Potter & Brumfield
VFM-11F11-K01
SENSOR
MAF
NC
22 AWG Red
22 AWG Orange
22 AWG
22 AWG Black
22 AWG
Burn off
22 AWG Blue
22 AWG Purple
Title
Long Ranger Trailer III
Size
C
Number
120009
Rev
Date
4/21/00
Drawn by
NRB
Filename
TRAILER.S01
Sheet
1 of 1